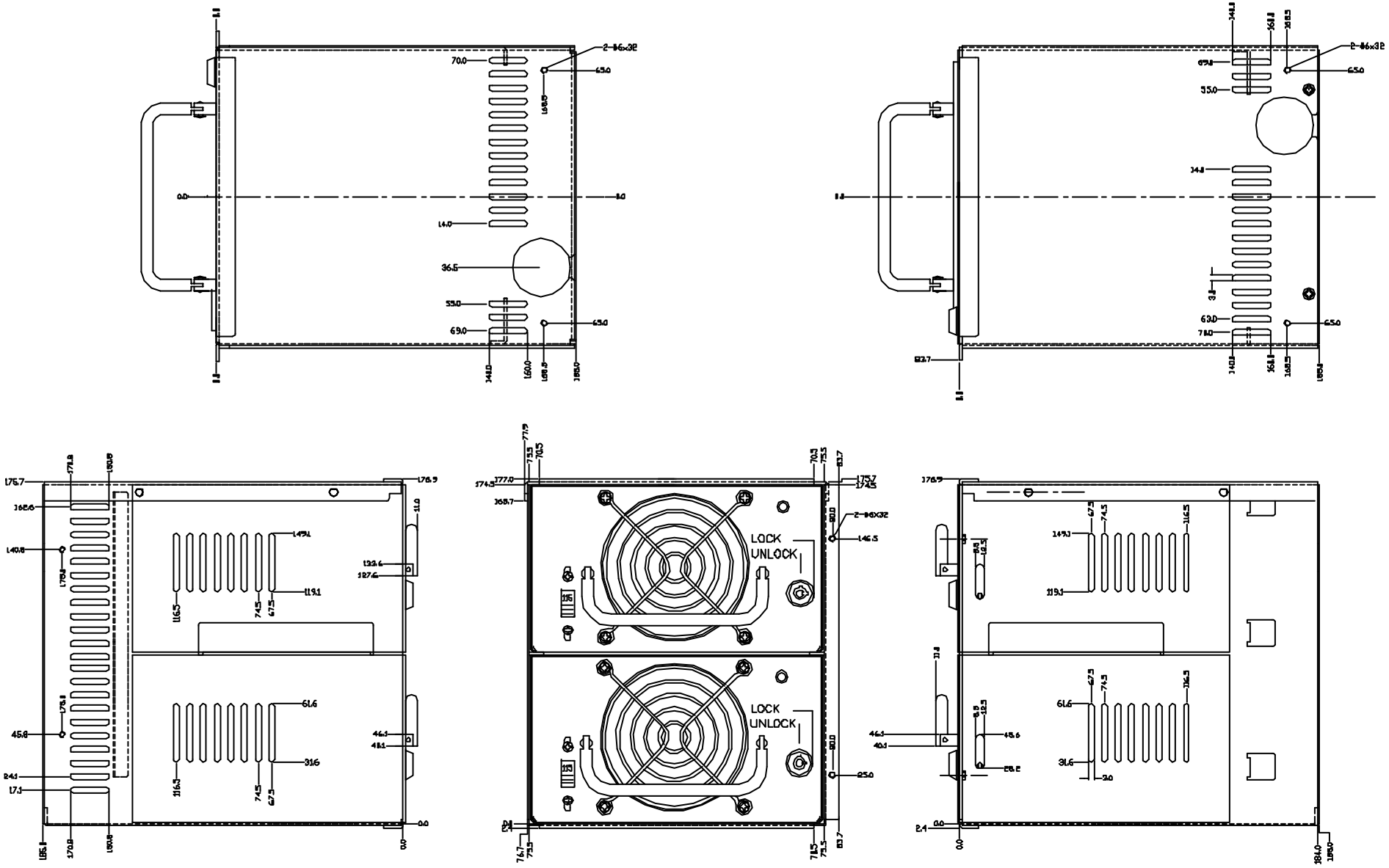
2-M6x32
LOCK
UNLOCK
LOCK
UNLOCK

| | | |